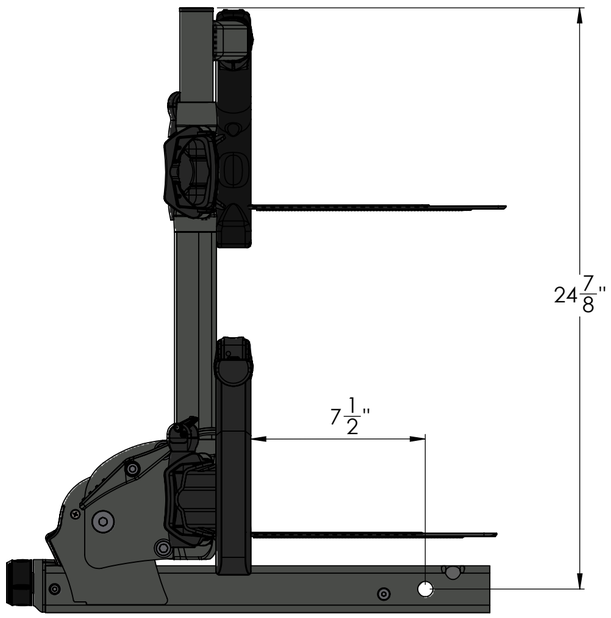
24 7/8"
7 1/2"

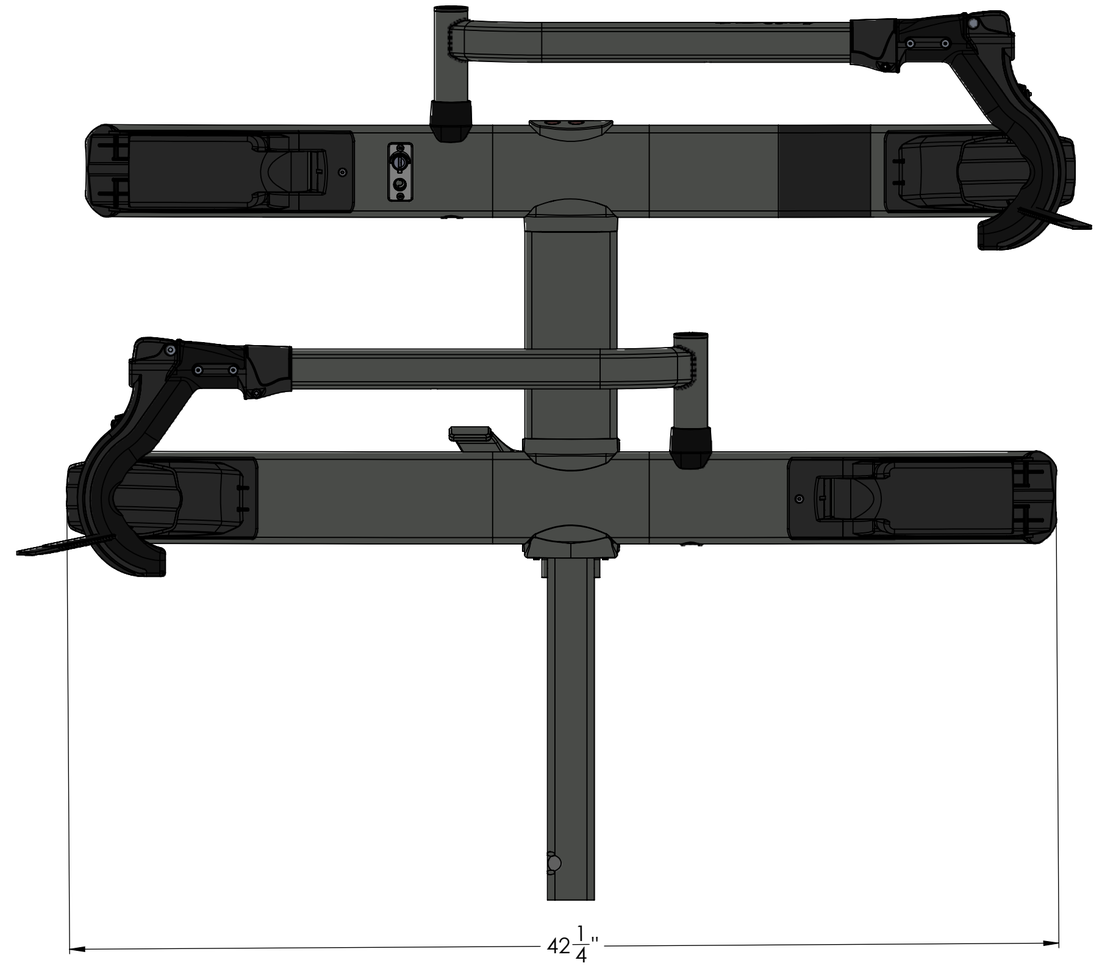
42 1/4"

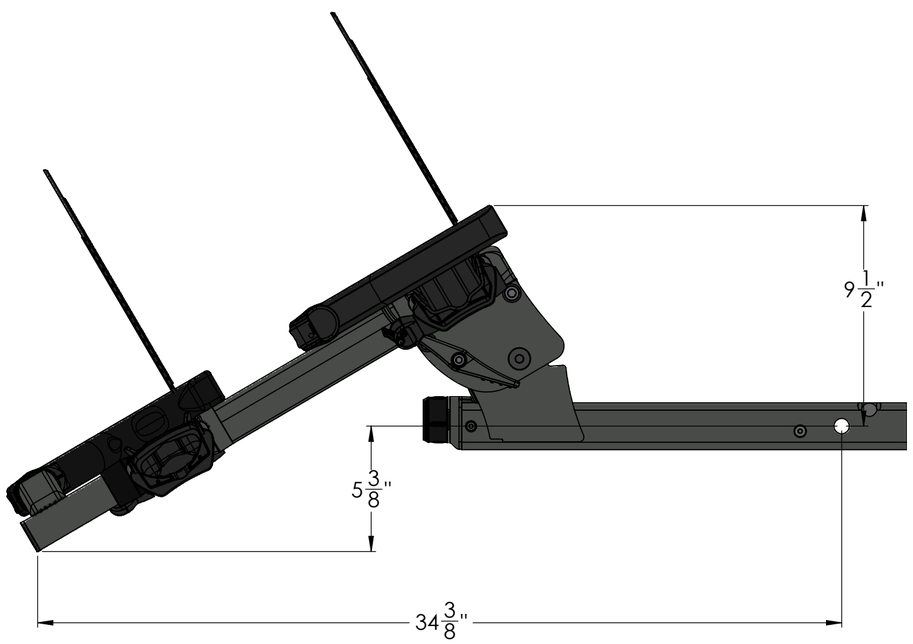
9 1/2"
5 3/8"
34 3/8"

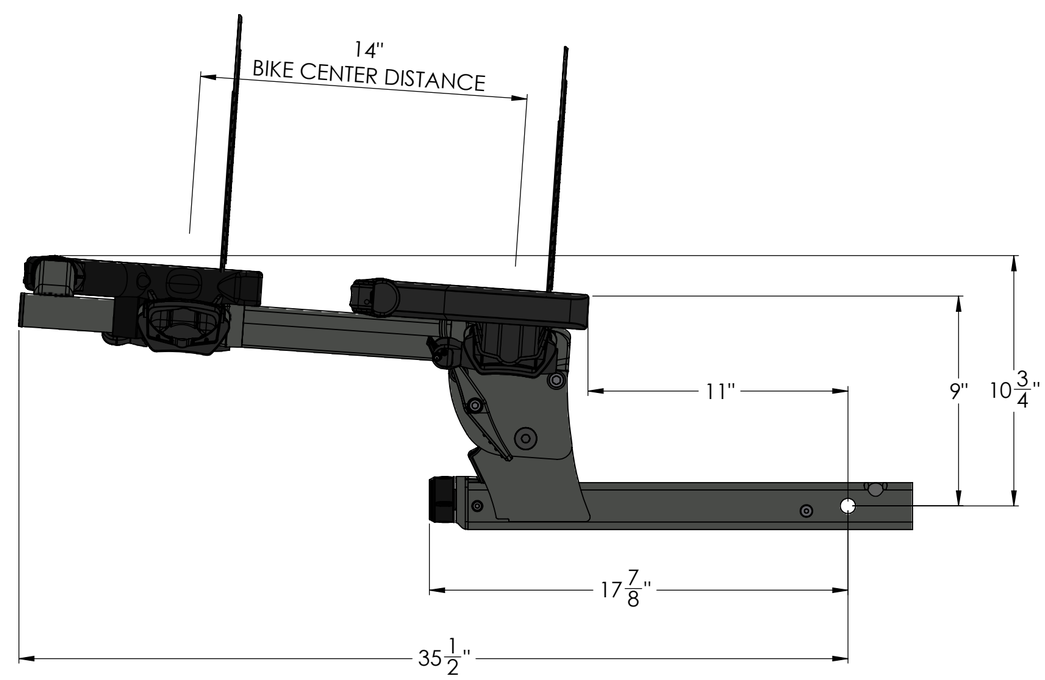
14"
BIKE CENTER DISTANCE
11"
9"
10 3/4"
17 7/8"
35 1/2"

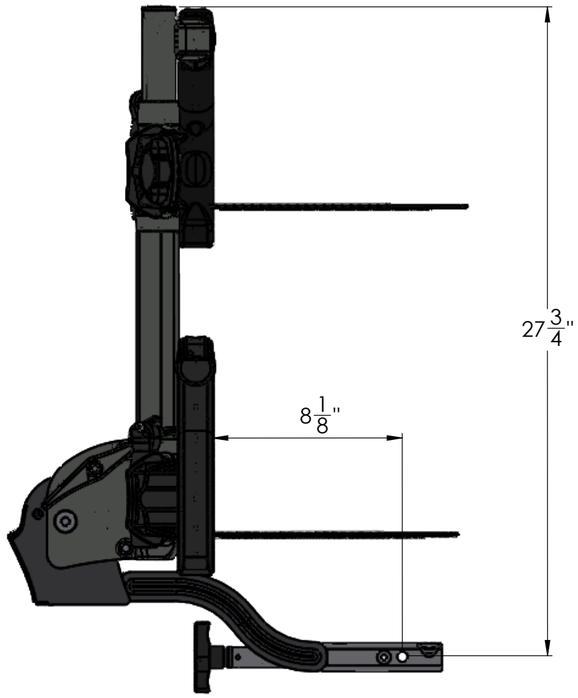
27 3/4"
8 1/8"

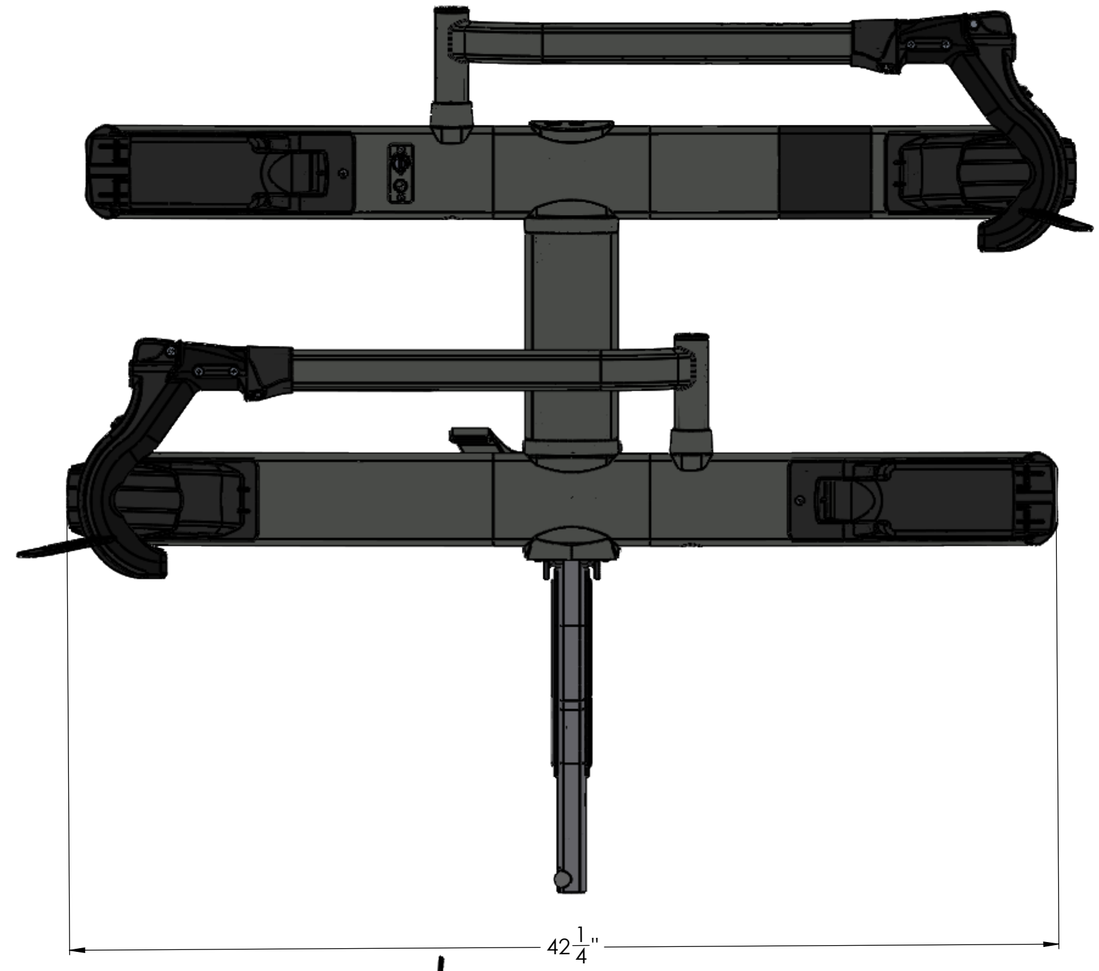
42 1/4"

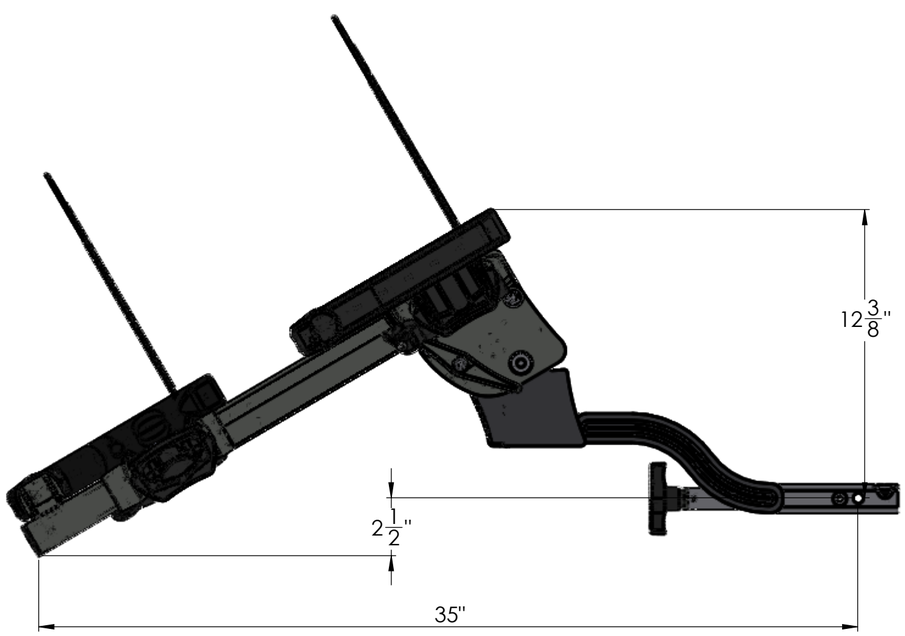
12 3/8"
2 1/2"
35"

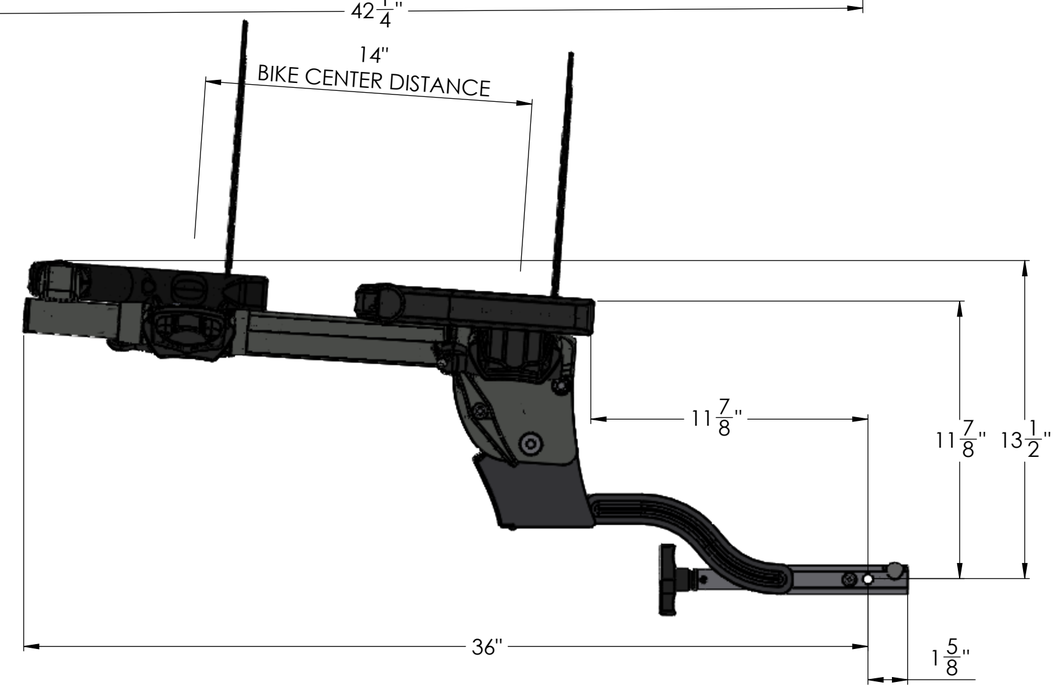
14"
BIKE CENTER DISTANCE
11 7/8"
11 7/8"
13 1/2"
36"
1 5/8"